Opti JR Puller collection

Meeting international kids requirements

Opti JR

Opti Junior Puller collection

Opti Junior is a collection of pullers to be used in zips for children's wear. This collection was specially created to represent one comprehensive offer of all the pullers that meet comply with the **standards** and meeting all the **requirements** for children's wear.

Product safety issues:

baby's and infant's wear – puller selection recommendations

- Try not to develop pullers that entice the children to put them in their mouths or bite the pullers.
- Rubber pullers are not advised as they can be bitten / chewed.
- Keep puller design plain, simple and smooth without pointed shapes / corners.
- Avoid pullers with holes such as ring pullers
- Avoid pullers with looped fabrics
- Avoid long hanging pullers
- Use ferrous-free pullers which are suitable for passing through Ferrous Metal Needle Detectors
- Hook puller attachment must not be used.

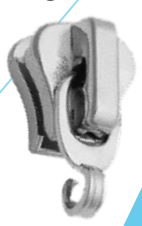

Opti JR

Standards:

A. **CPSIA** HR 4040 Torque and Tension requirements - Consumer Product Safety Improvement Act - For USA Compliance

B. **REACH** – Registration , Evaluation Authorization and Control of Substances Hazardous to health - For EU Compliance

C. **Coats RSL** – Restricted Substance List - For Coats Compliance

Requirements:

- **Torque & tension test** - Use and Abuse (Small Part) 16 CFR 1500 Section 51-53 Modified / F963 4.6, 4.7-4.9 , 8.8, 8.9.: Torque strength of the puller on all children's sliders for the USA must meet 4lbs inch/4.6kgfcm2 in both directions and hold for 10 seconds. Articles for toys require 4.2lbs inch/4.8kgfcm2.
- **Small parts**: Should any small part detach during the torque testing or general pull testing, the concerned lot will be rejected.
- **Sharp points & edges** - 16 CFR 1500 Section 48 & 49 modified: Should any sharp part detach during the torque testing or general pull testing, the concerned lot will be rejected.
- **Lead, cadmium and heavy metals** content:
  - Lead In substrate - CPSIA § 101 Total Lead Content In Substrates. Operating Procedures For Determining Total Lead (Pb), Test Methods CPSCCH-E1002-08.1 (metallic substrates),
  - Cadmium – EC no. 1907 / 2006 Annex XVII Item No 23 (EN 1122)
- **Phthalates** - CPSIA Section 108 - Prohibition on sale of certain Products containing specified Phthalates, Accessible Parts With Reference To Standard Operating Procedure For Determining Phthalates, Test Method CPSC-CH-C1001-09.3

Color key

What each page color mean?

Auto-Lock

Diecast Direct Fit pullers

#3

4mm- teeth width

#5

6mm- teeth width

Flat-Lock
Non-Lock

#3

4mm- teeth width

#5

6mm- teeth width

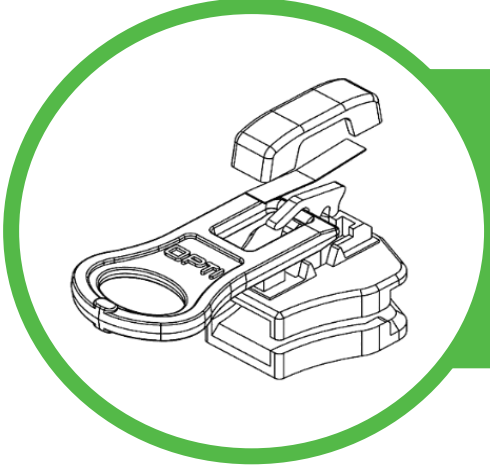

Auto-Lock

Diecast Direct Fit pullers

#3

4mm- teeth width

FULDA

S40 - code: FULDD
Length - 16mm

FULDA

RT0 - code: FULDA
Length - 18mm

MOSS no logo

RT0 - code: KID10
Length - 17mm

WERRA

M4Y - code: WERRK
Length - 18mm

DETROIT no logo

P40 - code: KID09
Length - 18mm

DALLAS

P40 - code: KID07
Length - 19mm

LAOS

S40 - code: REGUA
Length - 17mm

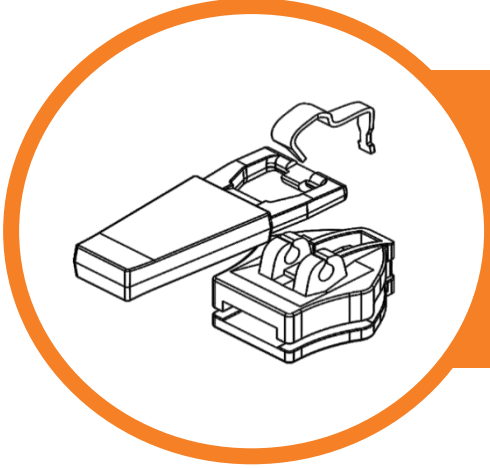

Flat-Lock

#3

4mm- teeth width

FULDA flat-lock

stamped

M45 - code: FULDX
Length - 16 mm

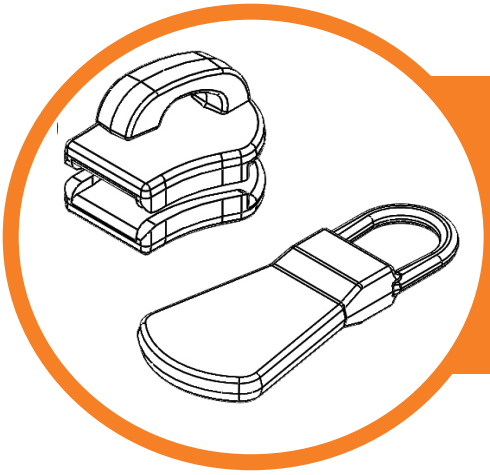

Non-Lock

#3

4mm- teeth width

BAGGY

S40 - code: BAG23
Length - 23mm

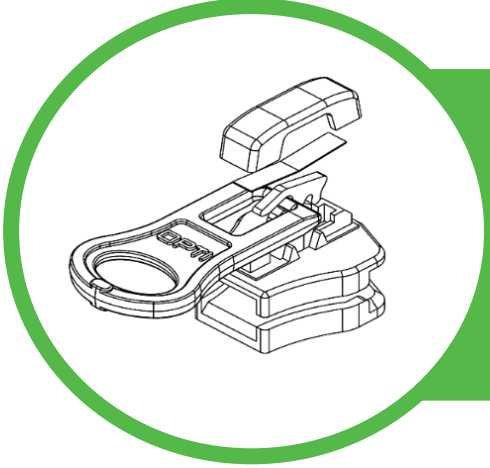

Auto-Lock

Diecast Direct Fit pullers

#5

6mm- teeth width

SHANGHAI

P60 - code: WES24
Length - 24mm

REGUS

M6Y - code: REGUS
Length - 22mm

FULDA

S60 - code: FULDA
RT10 – code: FULDA
M6Y – code: FULDA
Length - 22mm

WERRA

P60 - code: WERRA
M6Y – code: WERRA
Length - 22mm

LAOS

S60 - code: REGUA
M6Y - code: REGUA
P60 - code: REGUA
Length - 20mm

BEIRUT

S60 – code: BEL21
M6Y- code: BEL21
Length - 21mm

WERRA style

S60- code: WERRA
M60- code: WERRA
Length - 23mm

RIGA

M6Y - code: SPE22
Length - 22mm

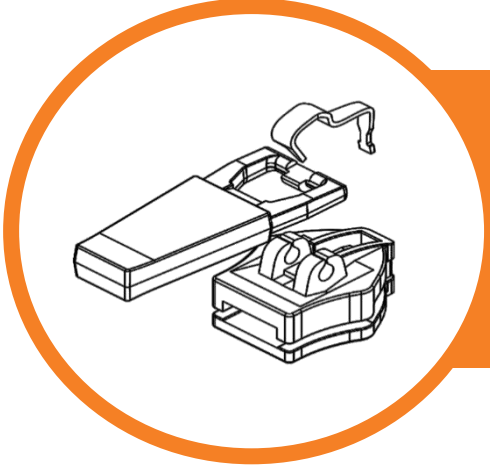

Flat-Lock

#5

6mm- teeth width

FULDA flat-lock

S60 - code: FULDX
Length - 21mm

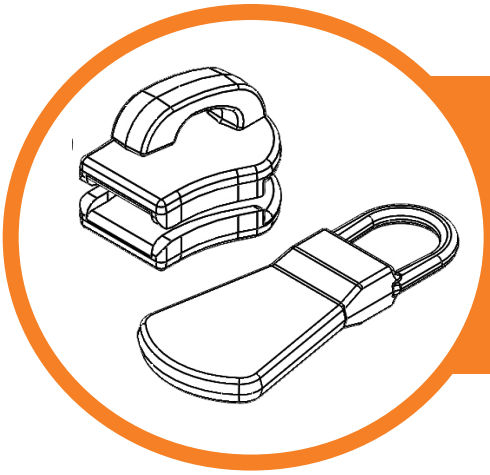

Non-Lock

#5

6mm- teeth width

BAGGY

S60 - code: BAG32
Length - 32mm

MINSK

S60 - code: BUL19
Length – 19mm